This document is the property of Amphenol Corporation and is delivered on the express condition that it is not to be disclosed, reproduced or used, in 1.2whole or in part, for manufacture or sale by anyone other than Amphenol Corporation without its prior concent, & that no right is granted to disclose or to use any information in this document.

REVISIONS

SYM	ECN	DESCRIPTION	DATE	APPROVED
A	HK2010	RELEASE FOR CUSTOMER	7/16/01	IP
B	HK2066	RISING GUIDE PLATE	9/28/01	IP
C	HK2066	RISING MATING POSITION	9/28/01	IP

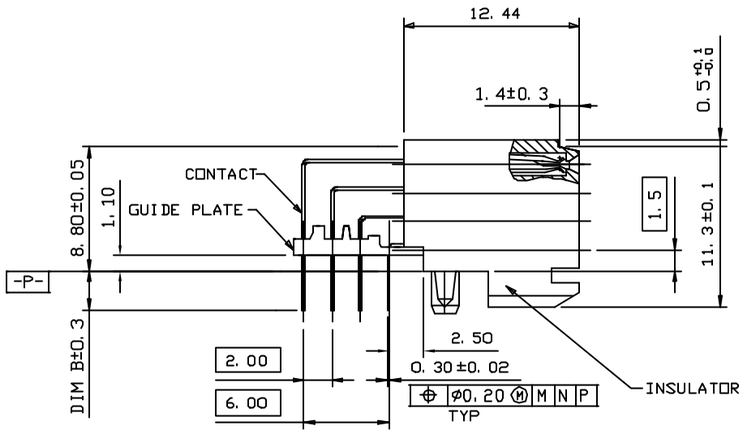

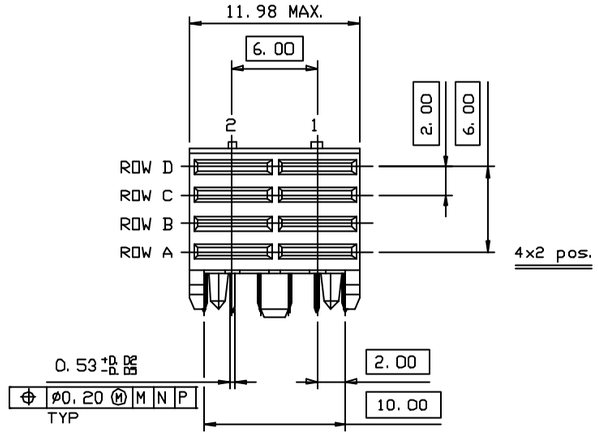

NOTES:

1. HOUSING MATERIAL: LIQUID CRYSTAL POLYMER, UL 94V-0;
   30% GLASS FILLED;
   COLOUR: NATURAL;
2. CONTACT MATERIAL: PHOSPHOR BRONZE;
3. CONTACT FINISH: 3.1. 2.0um MIN. NICKEL UNDER PLATING OVER ALL;
   3.2. 0.8um MIN. GOLD PLATING ON MATING AREA FOR 400 CYCLES;
   3.3. 1.27um MIN. GOLD PLATING ON MATING AREA FOR 500 CYCLES;
4. PART MARKING: PART NUMBER & DATE CODE.

RECOMMENDED PC BOARD LAYOUT
COMPONENT SIDE

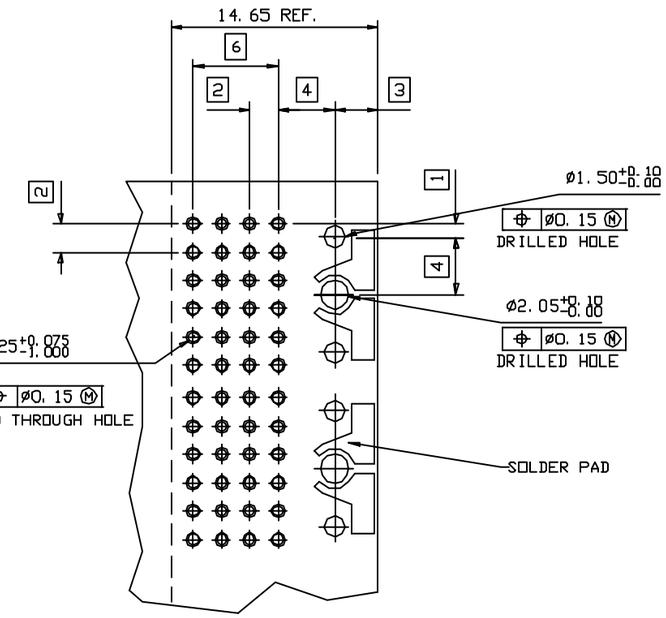

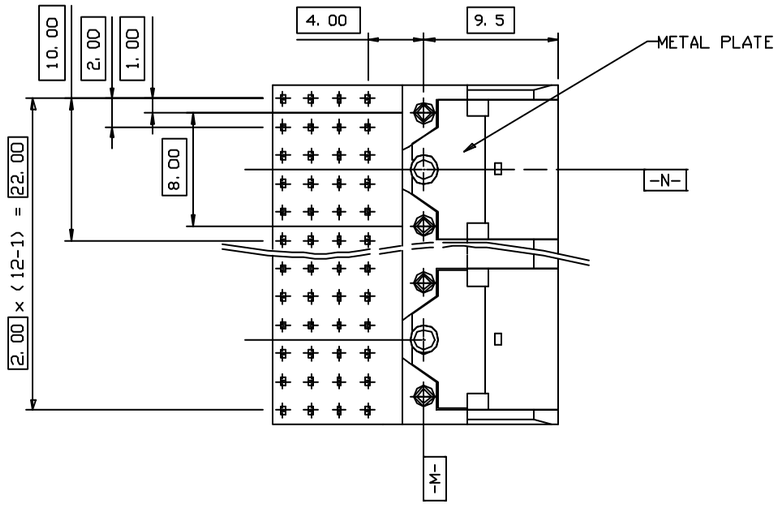

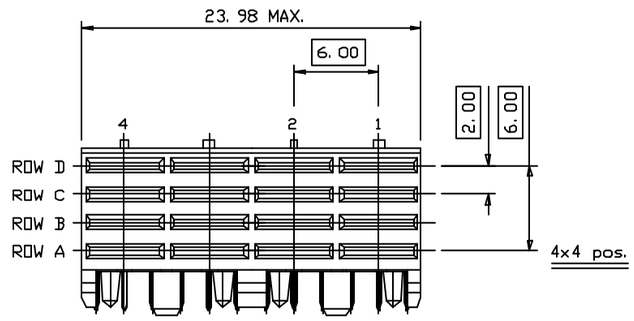

PRESS-FIT HOLES	DIMENSIONS
HOLE DIAMETER AFTER PLATING	0.65-0.80
DRILLED PLATING	0.81-0.86 (0.85 DRILL)
COPPER PLATING	0.025MIN
TIN PLATING	0.005-0.015

PRODUCT NUMBER SYSTEM

2 0 2 X - A P 6 S - 4 X X - 0 X 0 1

PRODUCT SERIES
202: METRIC MODULAR SYSTEM

LEVEL OF PERFORMANCE
1: 400 CYCLES
2: 500 CYCLES

NUMBER OF CONTACTS
02: 4 x 02 = 08
04: 4 x 04 = 16

DEVIATION
01: FOR NOKIA W/ METAL PLATE

SOLDER TO BOARD TAIL LENGTH (DIM B)
1: 2.73
2: 3.53

CUSTOMER DRAWING

UNLESS OTHERWISE SPECIFIED TOLERANCES

	U.S.	METRIC
.X +/-		0.20
.XX +/-		0.10
.XXX +/-		
FRACTIONS +/-		
ANGLES +/-		1°

FOR MATERIALS AND FINISHES SEE NOTES

REMOVE SHARP EDGES

DIMENSIONS

~~U.S.~~	~~INCHES~~
(METRIC)	(NN)

APPROVAL	DATE
DRAWN Charles Yang	9/28/01
CHECKED Michael IP	9/28/01
CHECKED	

DRAWING FILE : DRAWINGS\2MMFB\02X-AP6S-4XX-0X01

ANGLE OF PROJECTION

Amphenol
Amphenol East Asia Limited

TITLE CUSTOMER DRAWING for 2mm FB POWER, FEMALE, 4-ROW, RIGHT-ANGLE SOLDER-TO-BOARD, W/ METAL PLATE

SIZE	DRAWING NO.	REV.
A3	202X-AP6S-4XX-0X01	B

SCALE 2:1 SHEET 1 OF 1