REVISIONS		
ISS	ZONE	DESCRIPTION\PER REQUEST\DATE
A1	E-5	ADDED ACCOUNT\N/A\12-17-01'
A2	E-5	ADDED STAKE 4 POINTS\N/A\05-27-02'
B	A-3	NO.3 WAS CHANGED\RD-DM92022001L\02-20-03'

CABLE \ NO.	A	B	C
RG-58A/U, 58C/U	8.3	1.7	3
RG-174/U, 188A/U 316/U	5.2	2.8	2

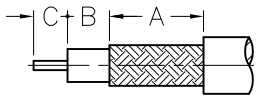

RECOMMENDED CABLE STRIPPING DIM'S
(建議剝線尺寸)

* RG-58A/U, 58C/U
1. CRIMPED FERRULE HEX CRIMP SIZE .213"
2. CRIMPED CONTACT PIN SQ. CRIMP SIZE .042"

* RG-174/U, 188A/U, 316/U
1. CRIMPED FERRULE HEX CRIMP SIZE .128"
2. CRIMPED CONTACT PIN AFM8 ADJUST TO 4 POSITIONER K727

REMARK:
1. NO.2,8 MUST WITHSTAND A 4 lbs. MIN. PUSHOUT FORCE FROM NO.1,7 AFTER STAKING OPERATION
2. REMARK 1 IS MAINTAINED BY STAMPING THE FOUR POINTS SHOWN ON THE DRAWING WITHOUT PUNCTURING NO.1,7

(1. 打四點後零件 2,8 由零件 1,7 推出至少必須承受 4 磅推力)
(2. 打四點後除需符合備註1 要求外 且不可擊穿零件 1,7)

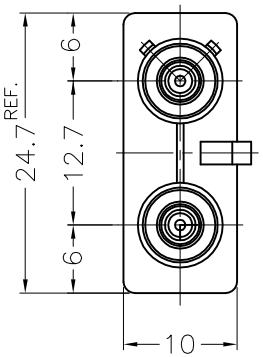

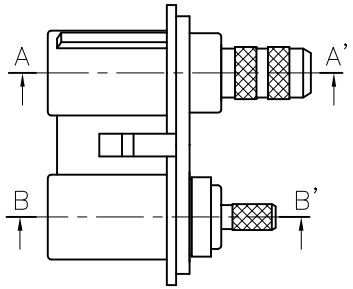

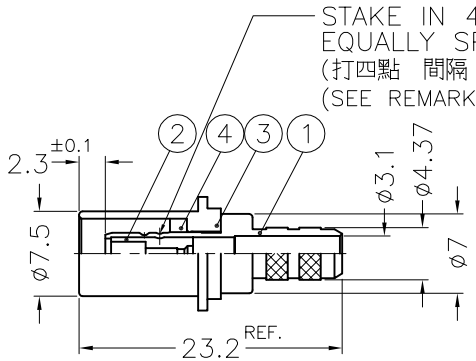

A-A' SECTION (A-A' 剖面)

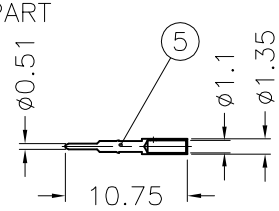

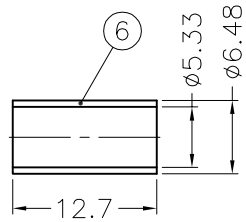

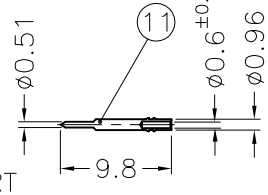

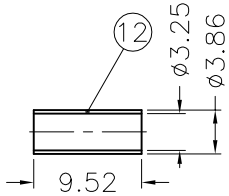

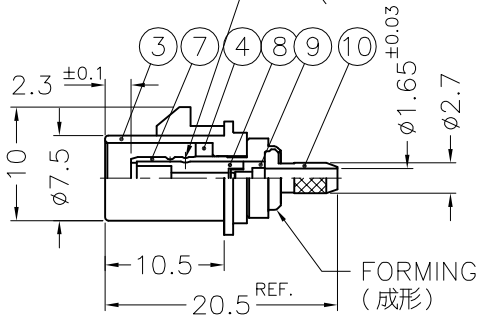

B-B' SECTION (B-B' 剖面)

NOTES: FINISH (PLATING THICKNESS IN MICRO-INCHES)
1. BRASS PER QQ-B-626, ALLOY 360, 1/2 H ; JIS H3250 C 3604BD OR EQUIVALENT
2. NICKEL PL. 60 MIN. THICK OVER COPPER STRIKE
3. GOLD PL. 30 MIN. THICK OVER NICKEL PL. 100 MIN. THICK OVER COPPER STRIKE
4. TEFLON MIL-P-19468 OR EQUIVALENT
5. COPPER PER ASTM B-75 ALLOY C12200 OR EQUIVALENT
6. PBT(WITH 15% GLASS FIBER) PER CHANG CHUN GRADE 4115202 OR EQUIVALENT

TABLE

KEY CODING	PART NO.	DRAWING NO.	ITEM NO.	LOCK COVER
A	FA2-NASP-C00-9	FKT1121AW-009-NT30G-50	FK2121AAAA1NC5F	FKLC40101B
B	FA2-NBSP-C00-9	FKT1121BW-009-NT30G-50	FK2121AABA1NC5F	FKLC40102B
C	FA2-NCSP-C00-9	FKT1121CW-009-NT30G-50	FK2121AACA1NC5F	FKLC40103B
D	FA2-NDSP-C00-9	FKT1121DW-009-NT30G-50	FK2121AADA1NC5F	FKLC40104B
E	FA2-NESP-C00-9	FKT1121EW-009-NT30G-50	FK2121AAEA1NC5F	FKLC40105B
F	FA2-NFSP-C00-9	FKT1121FW-009-NT30G-50	FK2121AAFA1NC5F	FKLC40106B
G	FA2-NGSP-C00-9	FKT1121GW-009-NT30G-50	FK2121AAGA1NC5F	FKLC40107B
H	FA2-NHSP-C00-9	FKT1121HW-009-NT30G-50	FK2121AAHA1NC5F	FKLC40108B
I	FA2-NISP-C00-9	FKT1121IW-009-NT30G-50	FK2121AAIA1NC5F	FKLC40109B
K	FA2-NKSP-C00-9	FKT1121KW-009-NT30G-50	FK2121AAKA1NC5F	FKLC40110B
Z	FA2-NZSP-C00-9	FKT1121ZW-009-NT30G-50	FK2121AAZA1NC5F	FKLC40111B

NO.	DESCRIPTION	MATERIAL	FINISH	Q'TY	DRAWING NO.
12	FERRULE	NOTE 5	NOTE 2	1	FKFR00101A
11	CONTACT PIN	NOTE 1	NOTE 3	1	FKCP00101A
10	BARREL	NOTE 1	NOTE 2	1	FKBR00101B
9	INSULATOR	NOTE 4	NATURAL	1	FKNS00201A
8	INSULATOR	NOTE 4	NATURAL	1	FKNS00101A
7	BODY	NOTE 1	NOTE 2	1	FKBD00101A
6	FERRULE	NOTE 5	NOTE 2	1	FKFR00201A
5	CONTACT PIN	NOTE 1	NOTE 3	1	FKCP00301A
4	RING	NOTE 1	NOTE 2	2	FKLR00101A
3	LOCK COVER	NOTE 6		1	SEE TABLE
2	INSULATOR	NOTE 4	NATURAL	1	FKNS00401A
1	BODY	NOTE 1	NOTE 2	1	FKBD00401A

DIMENSIONS ARE IN MILLIMETERS

UNLESS OTHERWISE SPECIFIED TOLERANCES
0.5-6 = ±0.2
6-30 = ±0.4
30-120 = ±0.6
120-315 = ±1
315-1000 = ±1.6
1000-2000 = ±2.4

SCALE 1.5/1 | ISSUE B

PART NO. FA2-NXSP-C00-9

APPROVED DATE 02-25-03'

CHECKED DATE 02-25-03'

DRAWN DATE 02-25-03'

FILE NO. F:\DWG\FKT\1121XX\009\50\NT30G-B

Amphenol
Danbury,CT,USA-Tainan,Taiwan-Shenzhen,China

TITLE
FAKRA TWIN SMB CRIMP PLUG

DRAWING NO.
FKT1121XX-009-NT30G-50

ITEM NO.
FK2121AAXA1NC5F